Husqvarna®
Accessories

IPL, LDX Pruner Att., 2010-08, 545 10 34-56

LDX Pruner Att.

Spare parts
Ersatzteile
Pièces détachées
Reserve onderdelen
Repuestos
Reservdelar

Parts List No. 545103456		UNIVERSAL PARTS LIST	MODEL LDX Pruner Att.
Date 8/04/11	Replaces 545103456 - 2/02/10	**NOTE :** Illustration may differ from actual model due to design changes.	**Page:** 2

TYPE 2

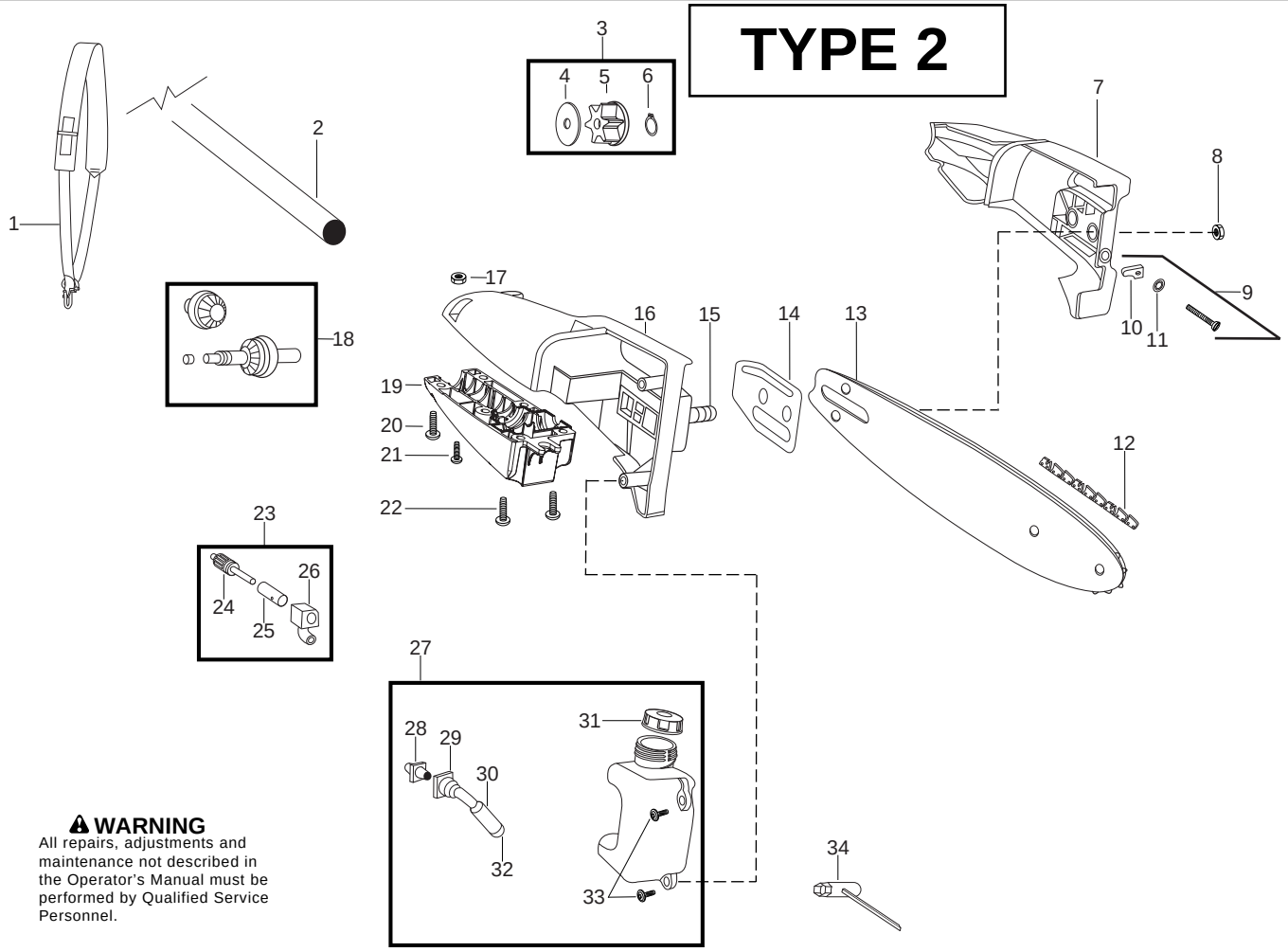

⚠ WARNING
All repairs, adjustments and maintenance not described in the Operator's Manual must be performed by Qualified Service Personnel.

Ref.	Part No.	Description	Ref.	Part No.	Description
1.	537216201	Harness	26.	530056522	Block - Oil
2.	545006082	Kit - Lower Driveshaft (Incl. flex.)	27.	530056528	Assy - Oil Tank (Incl. 28,29,30,31,32)
3.	530071647	Kit - Sprocket Assy. (Incl. 4,5,6)	28.	530056524	Fitting - Oil Line
4.	530056521	Washer	29.	530021160	Intake - Oil Line
5.	530056520	Sprocket	30.	530037821	Filter - Oil
6.	530056563	Retainer - Sprocket	31.	530053072	Cap - Oil
7.	530057100	Assy - Bar Clamp (Incl. 9)	32.	530030189	Plug - Oil Filter
8.	530015917	Nut - Bar Mounting	33.	530015843	Screw
9.	530069611	Kit - Bar Adjust (Incl. 10,11)	34.	530031163	Wrench - Bar
10.	530015826	Pin - Bar Adjust			
11.	530038593	Retainer - Bar Adjust			
12.	530051524	Chain - 8"			
13.	530044908	Bar - 8"			
14.	530056523	Plate - Bar Pad			
15.	530016133	Bolt - Bar			
16.	530056513	Housing - Upper (Incl. 15)			
17.	530016284	Nut			
18.	530071646	Kit - Gear Assy.			
19.	530056514	Housing - Lower			
20.	530016312	Screw	✓	578666301	Decal-shaft warning
21.	530015805	Screw - Alignment		545056601	Clamp harness-lower
22.	530015886	Screw		545113301	Clamp harness-upper
23.	530071645	Kit - Oil Assy (Incl. 24,25,26,28)		530015940	Screw (harness clamp)
24.	530053764	Assy. - Gear Plunger		530031190	Scabbard
25.	530053765	Barrel		530031159	Wrench-hex (5/32)

✓ = New Part Number For This IPL

✱ = Refer to the Service Reference Indicated for more information.(Located at the END of the IPL)